A路　市电总输入柜

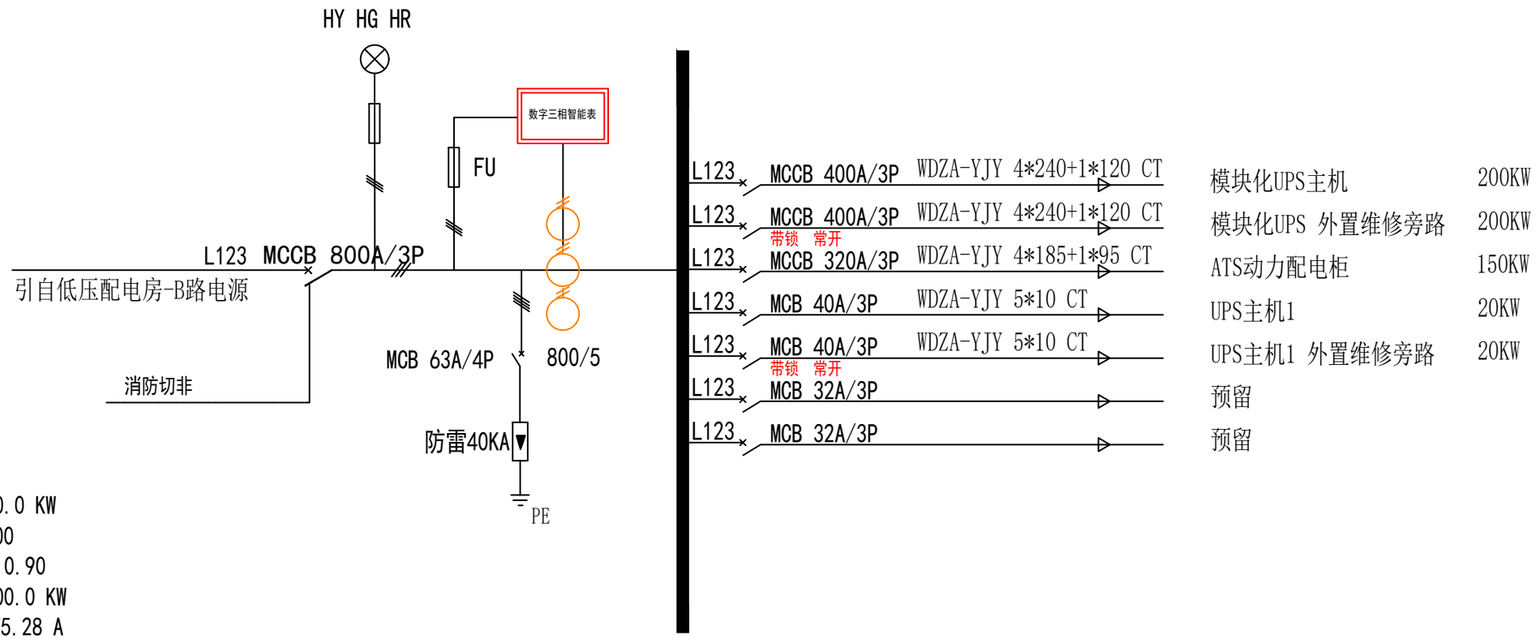

Pe = 400.0 KW
kd = 1.00
cosφ = 0.90
Pjs = 400.0 KW
Ijs = 675.28 A

B路　市电总输入柜

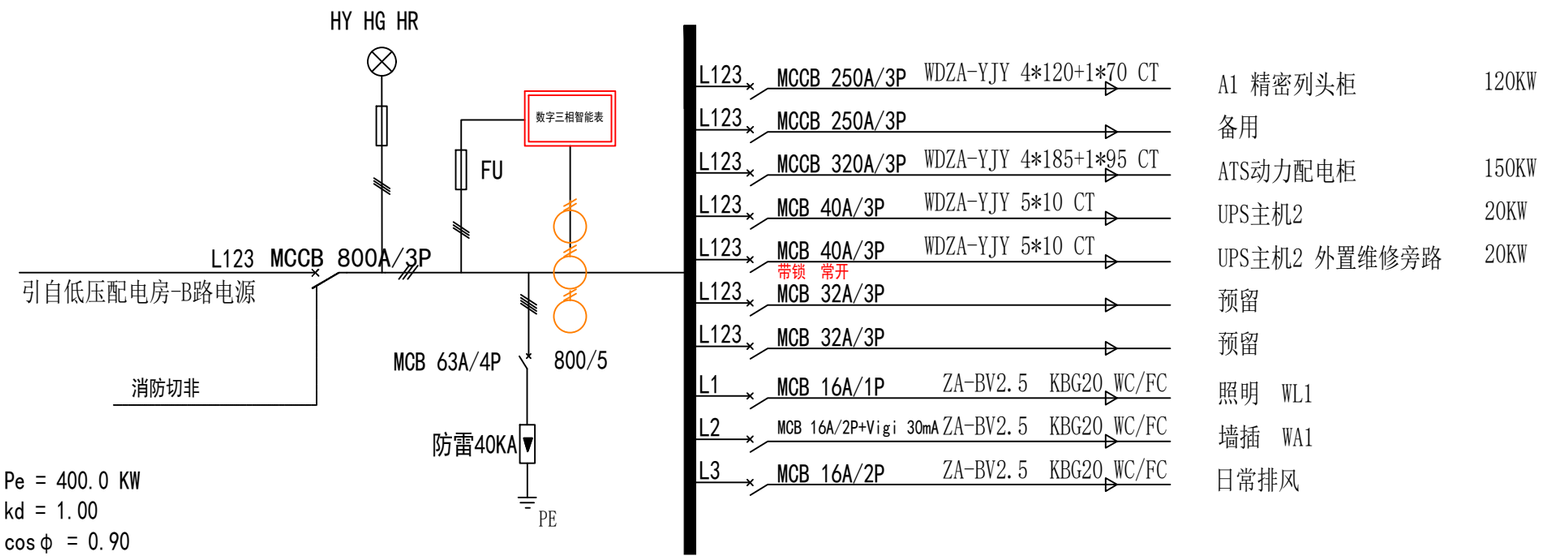

Pe = 400.0 KW
kd = 1.00
cosφ = 0.90
Pjs = 400.0 KW
Ijs = 675.28 A